PR 20

(Diaphragm Gauge)

STANDARD DIMENSIONS

HIRLEKAR PRECISION

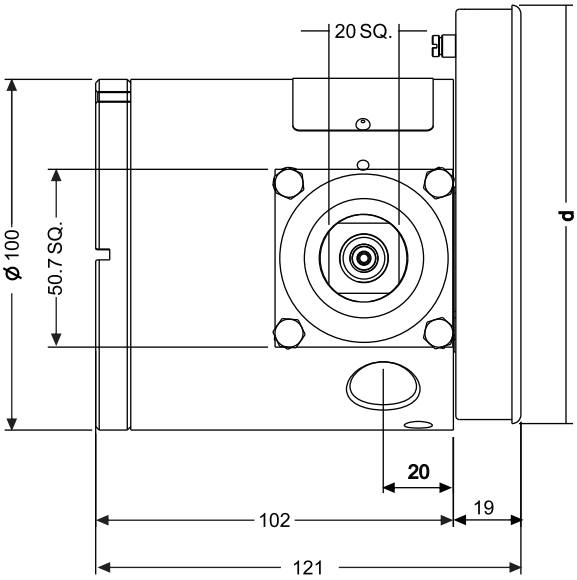

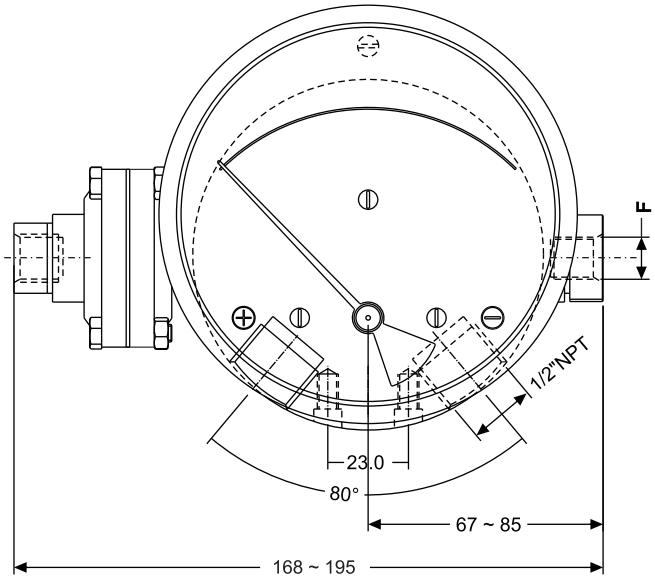

Dial Ø	d	F
115mm (4.5")	Ø119.7	1/4" NPT / BSP
150mm(6.0")	Ø 154.3	1/4" NPT / BSP